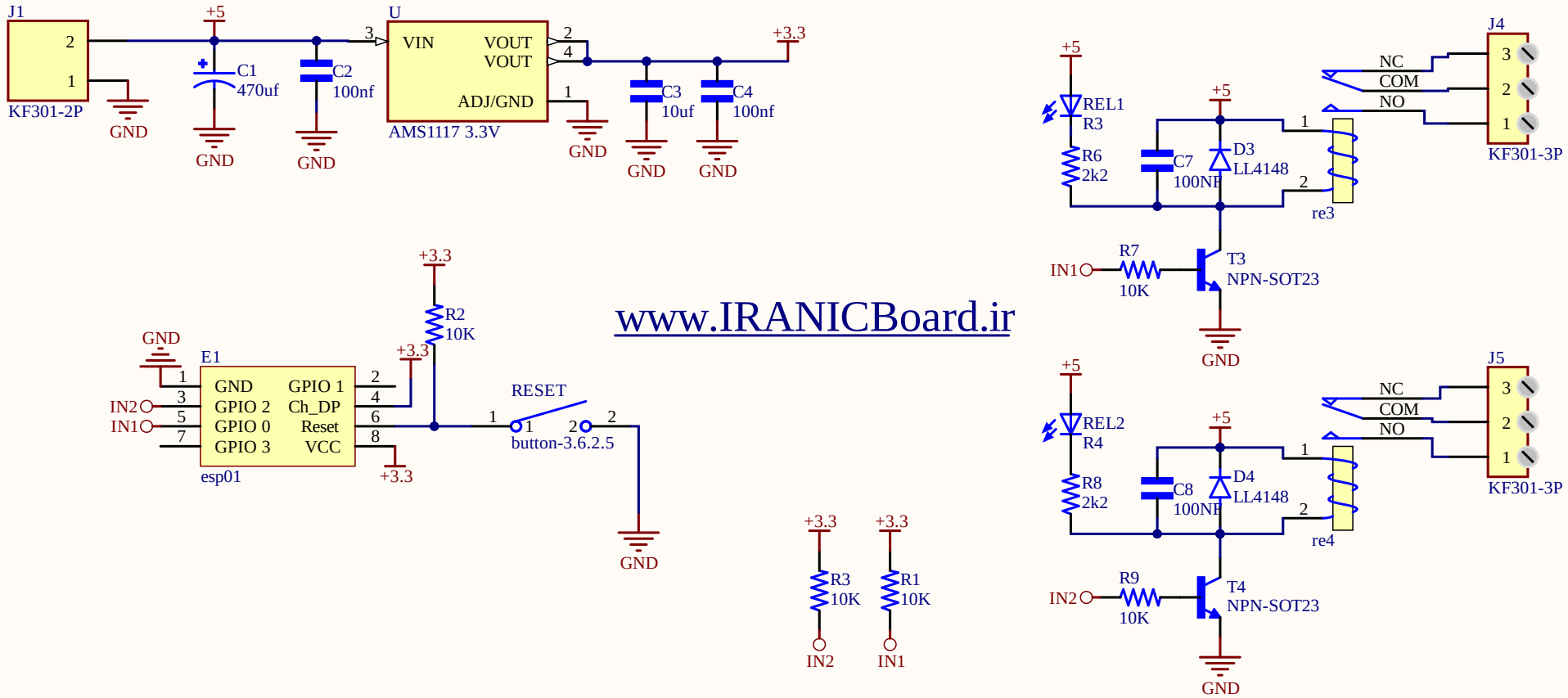

www.IRANICBoard.ir